CNP	Product Information 200WQ250-40-55(I)	Manufacturer	CNP
		Address	Yuhang District, Hangzhou, Zhejiang,
		Contact	86-571-88637351
		Date	2022/03/09
Project Name		Client Name	DPA
		Client Addr.	
Item NO		Contacts	Alireza
		Contact	

Part NO.	200WQ250-40-55(I)

Product Picture	Note
	The sewage submersible pump is composed of two parts: the motor and the pump. The two are separated by an oil chamber and a mechanical seal assembly. Divided into fixed automatic coupling installation and mobile installation

technology

Pump rotator speed	1480
Nameplate standards	CE

Material

Impeller	HT200
Pump shaft	20cr13
Rubber code	P
Pump case	HT200

Installation

Connection Code	F
Maximum Pressure/Temperatu	6bar/40
Flange Standard	DIN
Pressure Class	PN6

Medium

Medium Temperature	40
Maximum diameter of partic	40
Maximum Environment Temper	40

Structure dimension

Standard caliber	DN
Outlet Diameter	DN200

Motor

Number of Motor Phase	Three Phase
Protection Class	IP68
Insulation Class	F
Motor Power	55
Power Frequency	50HZ
Rated Voltage (V)	380V
Rated Current (A)	106
Starting mode	Star delta boot

Seal

Mechanical Seal	H-70

Others

Weight (kg)	850

CNP	Performance Curve 200WQ250-40-55(I)	Manufacturer	CNP
		Address	Yuhang District, Hangzhou, Zhejiang,
		Contact	86-571-88637351
		Date	2022/03/09
Project Name		Client Name	DPA
		Client Addr.	
Item NO		Contacts	Alireza
		Contact	

The hydraulic performance curve have been tested withClean Waterat20°C,density 1000kg/m³,and at 1bar atmospherical pressure. IS099062012 Grade 3B

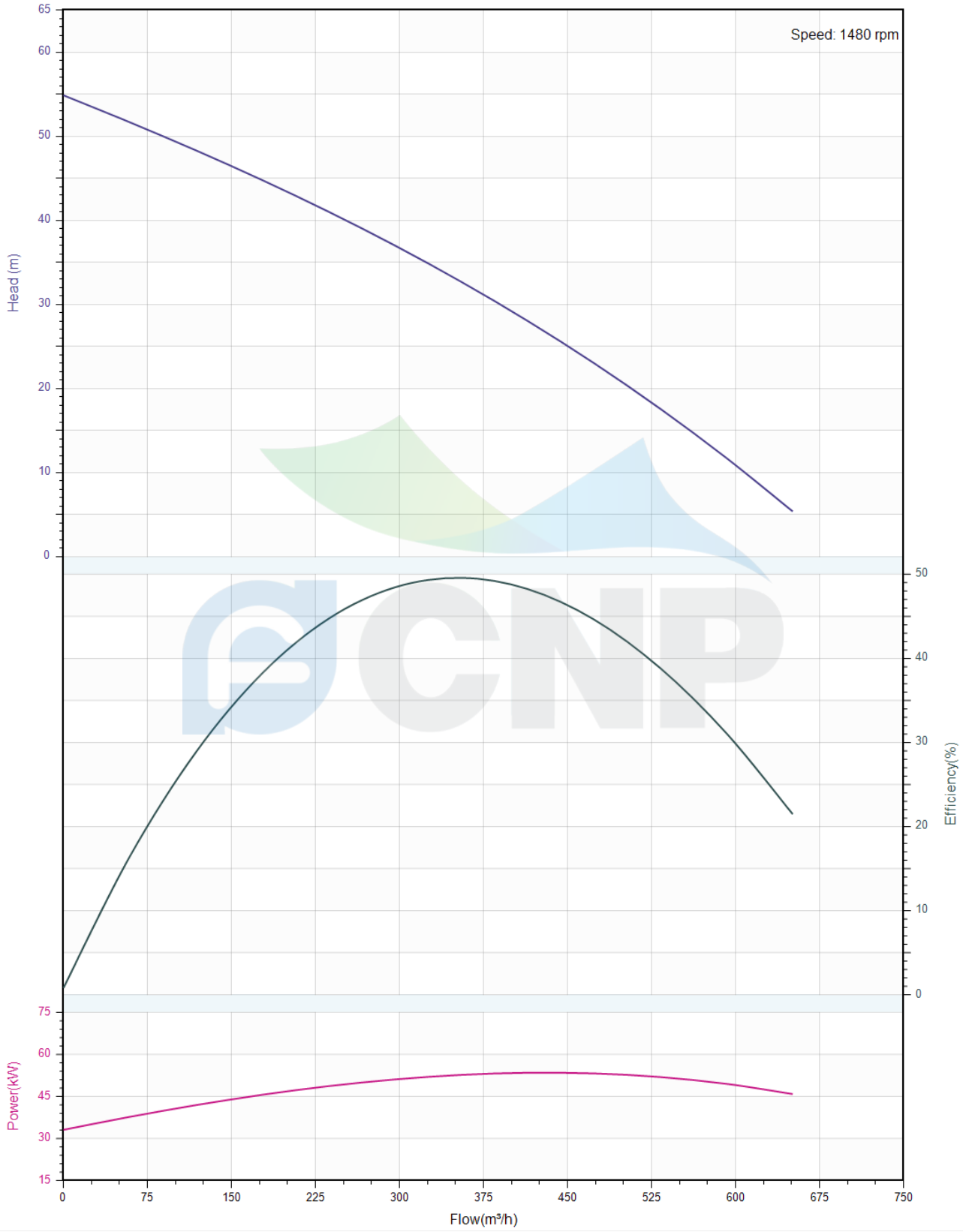

CNP	Pump Technical Parameters 200WQ250-40-55(I)	Manufacturer	CNP
		Address	Yuhang District, Hangzhou, Zhejiang,
		Contact	86-571-88637351
		Date	2022/03/09
Project Name		Client Name	DPA
		Client Addr.	
Item NO		Contacts	Alireza
		Contact	

Rated parameters	
Pump model	200WQ250-40-55(I)
Part NO.	200WQ250-40-55(I)
Rated flow (m^3/h)	250
Rated head (m)	40
Rated efficiency (%)	63.5
Power (kW)	45.5
Speed (rpm)	1480

Medium	
Pumped medium	Clean Water
Working temperature (°C)	20
Medium density (kg/m^3)	1000
Viscosity (mm^2/s)	1

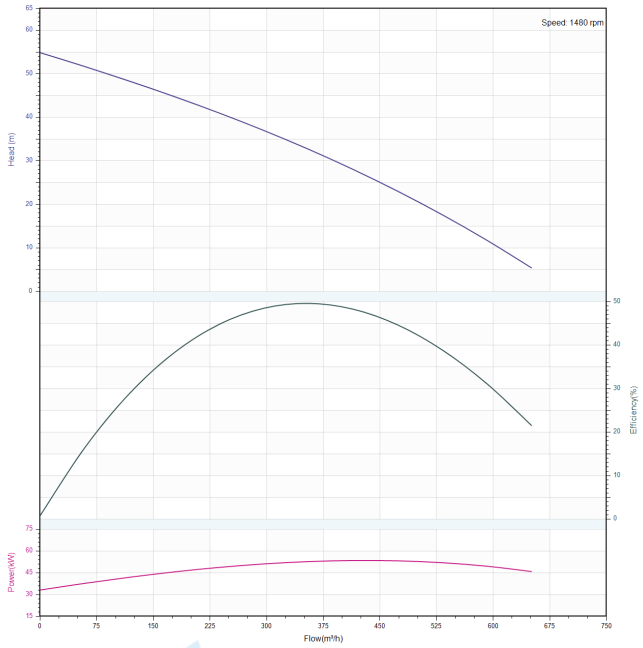

	Structure picture 200WQ250-40-55(I)	Manufacturer	CNP
		Address	Yuhang District, Hangzhou, Zhejiang,
		Contact	86-571-88637351
		Date	2022/03/09
Project Name		Client Name	DPA
		Client Addr.	
Item NO		Contacts	Alireza
		Contact	

CNP Nanfang Zhongjin Environment Co., Ltd.

	SECTIONAL DRAWING	No.		No.	
TYPE	submersible sewage pump	MODEL	WQ-55/75kW		

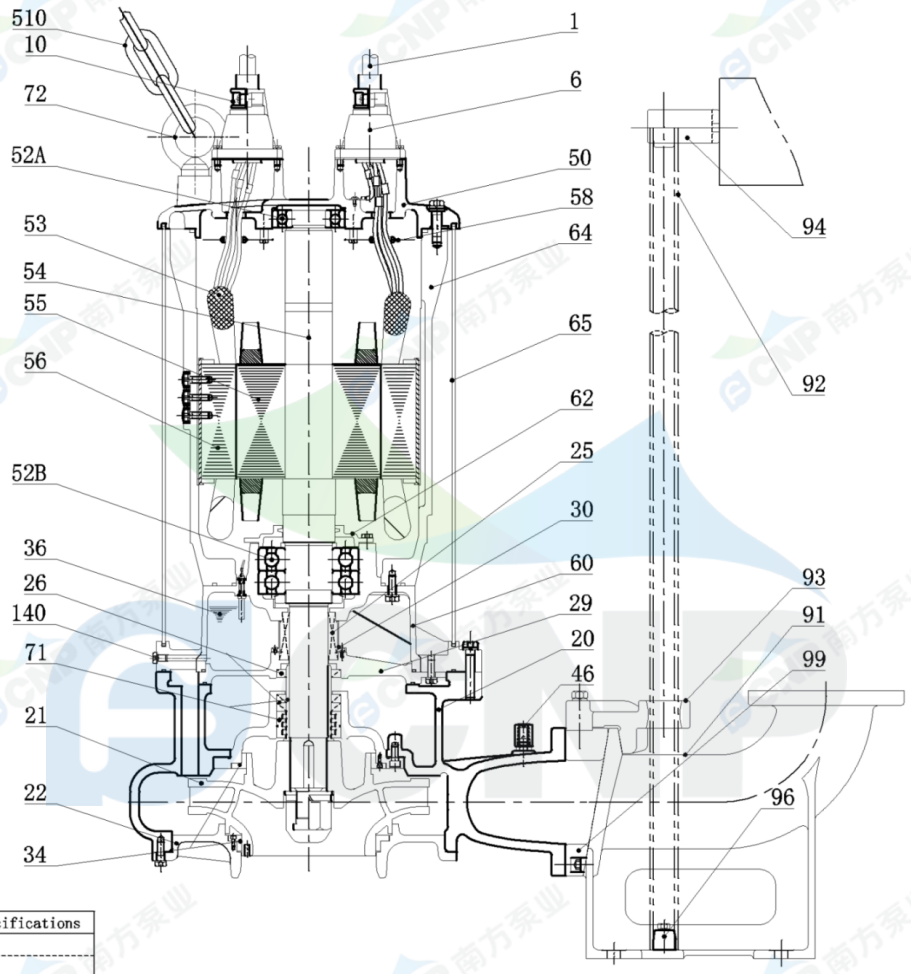

order specifications

No.	names of parts	number	material	No.	names of parts	number	material
1	cable	2	YCW	54	shaft	1	2Cr13
6	cable sleeve	2	HT200	55	rotor	1	
50	top cover	1	HT200	56	stator	1	
58	cable transit board	1	Q235	52B	lower bearing	2	
64	base	1	HT200	36	machine oil 32#		
65	Water proof cover	1	Q235	26	framework oil seal	3	NBRI-2
62	Bearing cover	1	HT200	140	oil filler plug	2	SUS304
25	mechanical seal	1	Carbon/SIC	71	Shaft sleeve	2	1Cr13
30	oil lift	1		21	impeller	1	HT200
60	lower cover	1	HT200	22	water inlet cover	1	HT200
29	Casingtop cover	1	HT200	34	Neck ring	2	HT200
20	casing	1	HT200	94	guiding	1	Q235Steel board
46	Air release bolt	2	SUS304	92	pipe	2	SUS304(unaffiliated)
510	lift chain	1	SUS304	93	guide hook	1	QT600
10	Cable lockblock	2	HT200	91	water outlet base	1	HT200
72	eye bolt	2	45#(forging galvanized)	99	coupling flange	1	HT200
52A	upper bearing	1		96	guide plug	2	HT150
53	Mini-thermalprotector	1		0			

Nanfang Zhongjin Environment CO.,LTD. unit: mm

	Installation picture 200WQ250-40-55(I)	Manufacturer	CNP
		Address	Yuhang District, Hangzhou, Zhejiang,
		Contact	86-571-88637351
		Date	2022/03/09
Project Name		Client Name	DPA
		Client Addr.	
Item NO		Contacts	Alireza
		Contact	

CNP Nanfang Zhongjin Environment Co., Ltd.

DIMENSION DRAWING No. No.

TYPE submersible sewage pump MODEL 200WQ250-40-55

MODEL	A	A1	A2	A3	A4	D	D1	W1	W2	H	H1	H2	Body weight
200WQ250-40-55	321	751	229	394	651	686	376	1250	490	1577	2577	154	950kg

Outlet diameter	d	T1	T2	T3	T4	T5	T6	T7	T8	T9	T10	E1	E2	E3	E4	E5	B1	B3	Coupling weight
200WQ250-40-55	200	380	260	280	60	100	400	450	1.5"(50Z4)	60	30	300	350	50	250	100	550	15	86kg

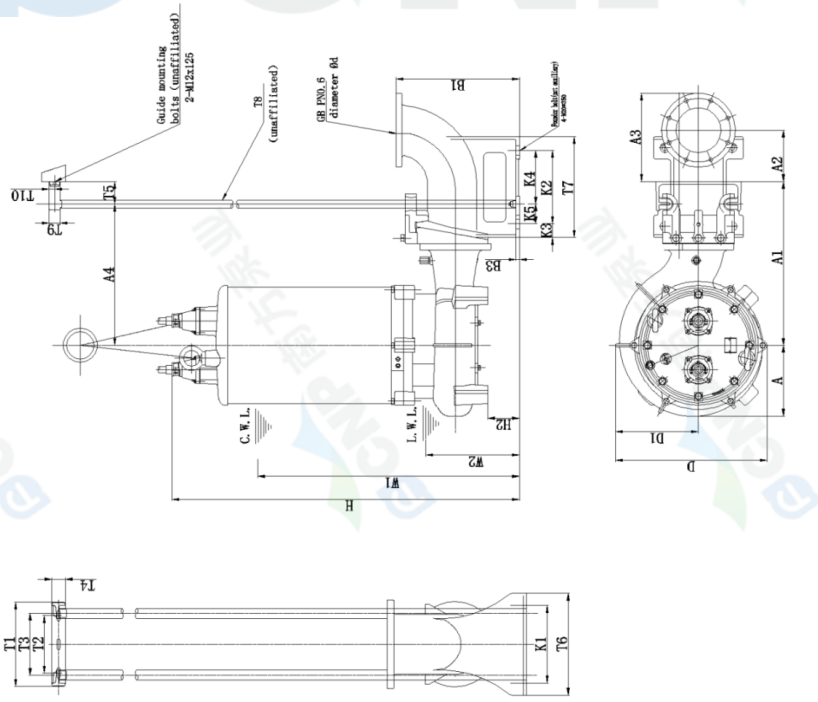

C.W.L. :minimum water level under continuous operation

L.W.L. :minimum water level under possible operation

Nanfang Zhongjin Environment CO.,LTD. unit: mm

CNP Nanfang Zhongjin Environment Co., Ltd.

DIMENSION DRAWING No. No.

TYPE submersible sewage pump MODEL 200WQ250-40-55

MODEL	d	A	A1	A2	A3	A4	A5	B	B1	D	D1	W1	W2	H	Body weight
200WQ250-40-55	200	1144	1188	350	460	693	673	716	597	722	372	1370	600	1663	950kg

diameter	elbow weight	bend weight
200	28.5kg	33kg

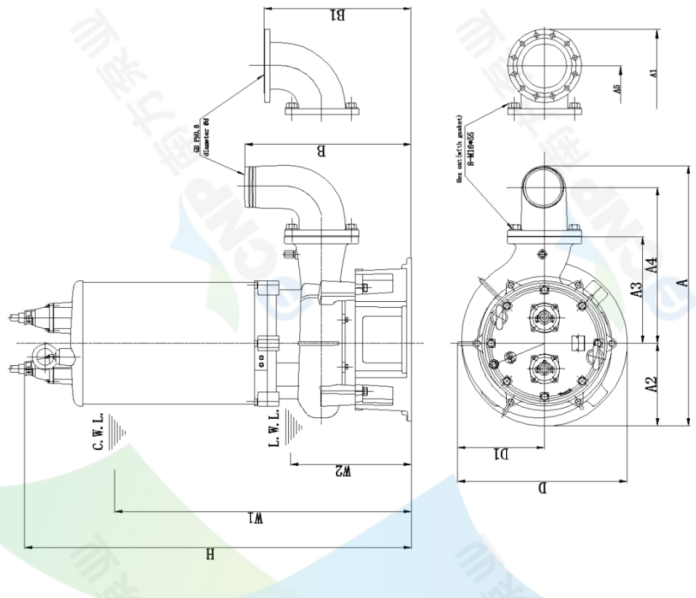

C.W.L. :minimum water level under continuous operation

L.W.L. :minimum water level under possible operation

Nanfang Zhongjin Environment CO.,LTD. unit: mm